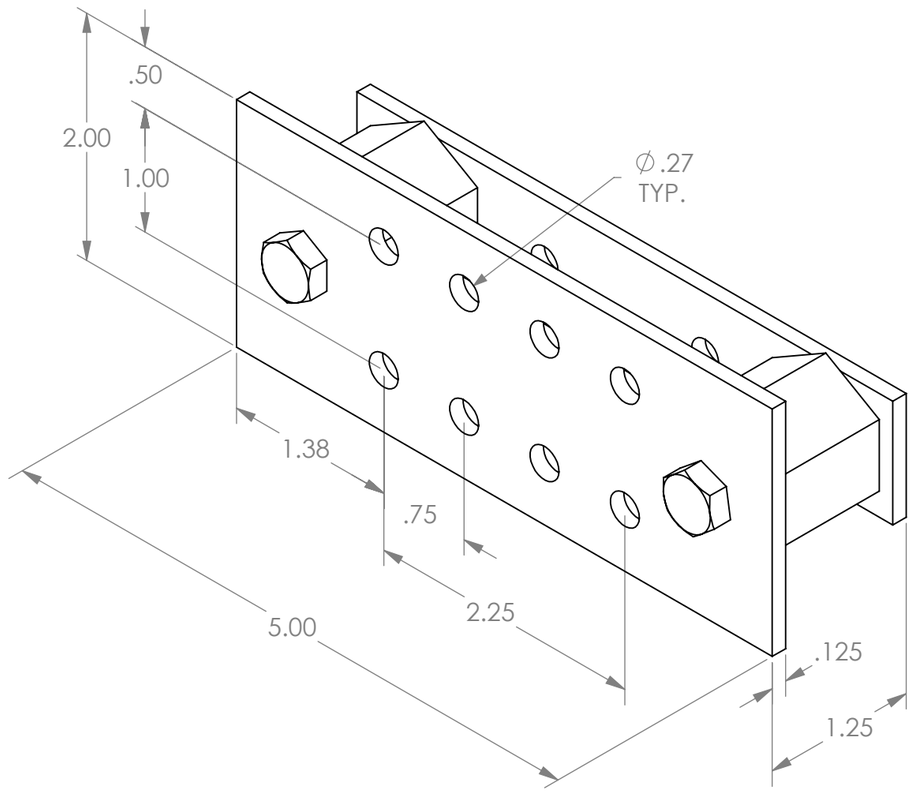
.50
2.00
1.00
∅ .27
TYP.
1.38
.75
2.25
5.00
.125
1.25

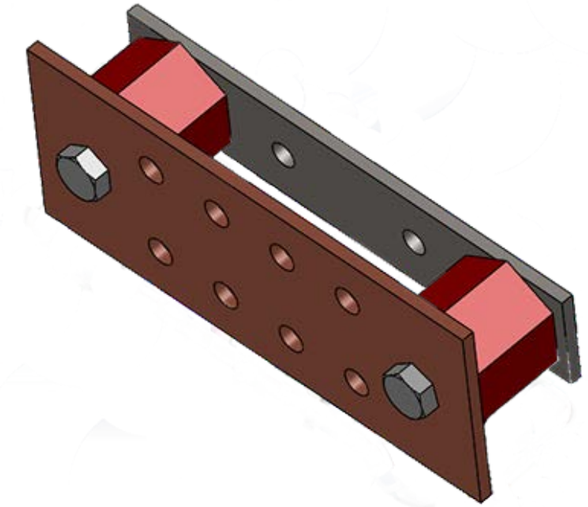

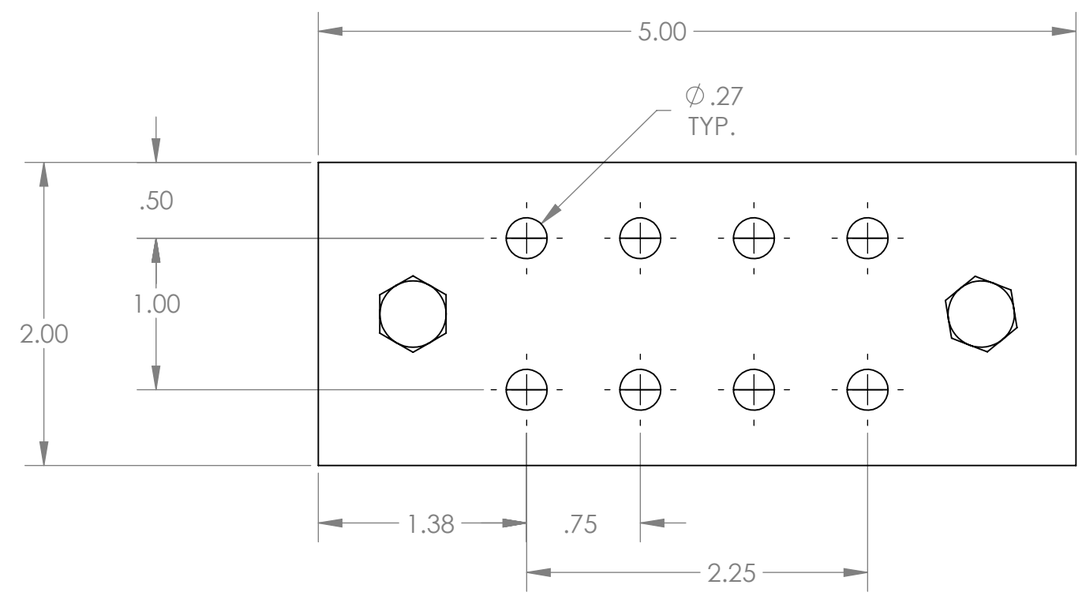
5.00
∅ .27
TYP.
.50
1.00
2.00
1.38
.75
2.25